ENCLOSURE SPECIFIC DATA
AVL
Mounts UM, UN, & UO

Revision: 9 March 2012

1.0 INTRODUCTION

1.1 Appendix Organization

This appendix is provided as a supplement to the baseline RC4000 User's Manual which describes the PCB board stack that is common to all systems. Section 2 describes the mechanical aspects of the controller, while section 3 describes the electrical connections.

2.0 MECHANICAL

2.1 RC4000 Antenna Controller Chassis and Lid

The ACU is mechanized as an embedded controller. The PCB board stacks are located inside a weatherproof enclosure, along with the Az & El motor drives, and system heater. Figure 1 shows the ACU.

Figure 1

The chassis of the RC4000 provides provisions to mount the enclosure that include #10-32 hardware on the bottom of the enclosure, as well as the sides. Figure 2 shows the enclosure drawings.

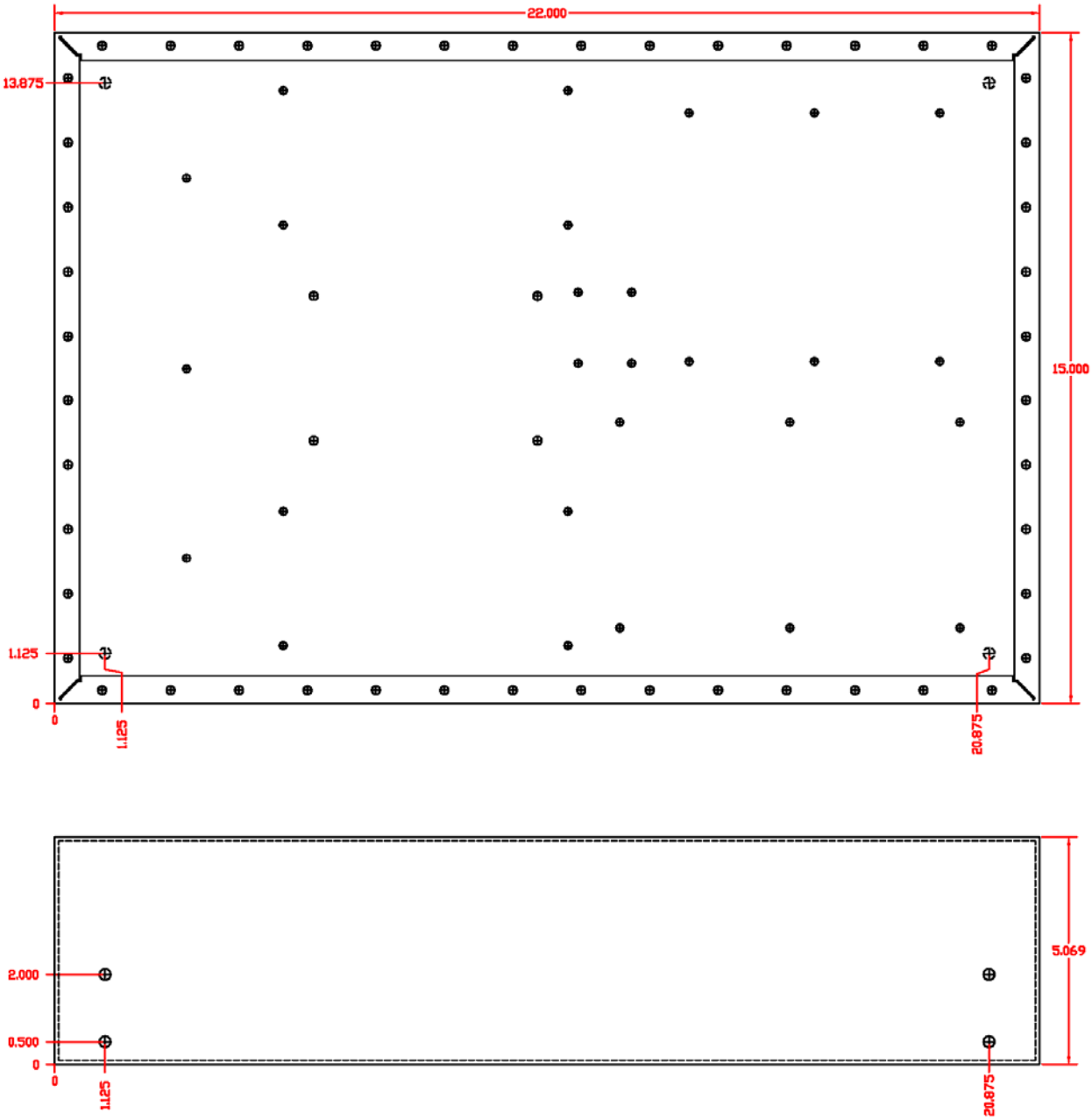

Figure 2

Figure 3 shows the lid of the enclosure.

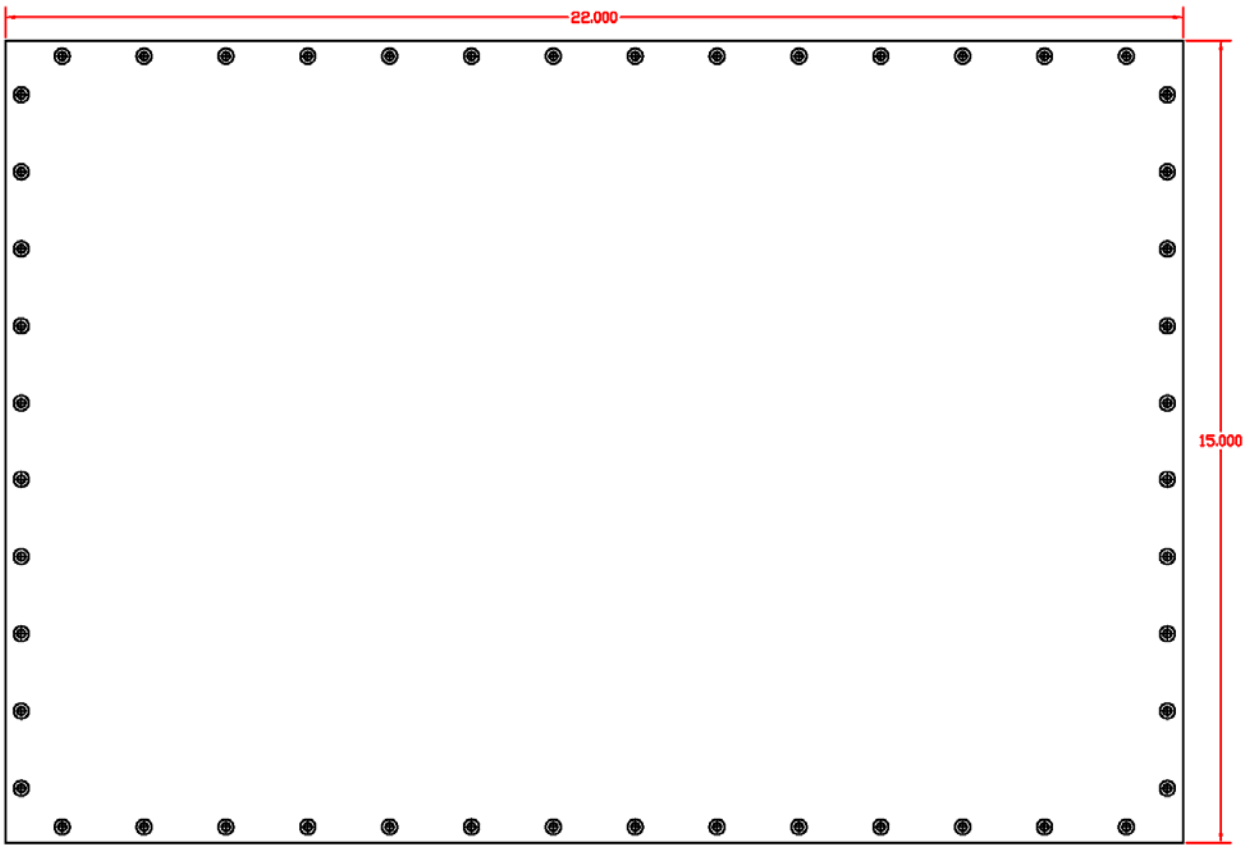

Figure 3

2.2 RC4000 End Panels

The RC4000 end panels are where the connectors are located. The User Interface end panel contains connectors that that the user may need to frequently have access to. The other end is the Antenna Interface end panel, which includes connectors that primarily go to the antenna itself.
Figure 4 shows both end panels, with the Antenna Interface on top and the User Interface on bottom.

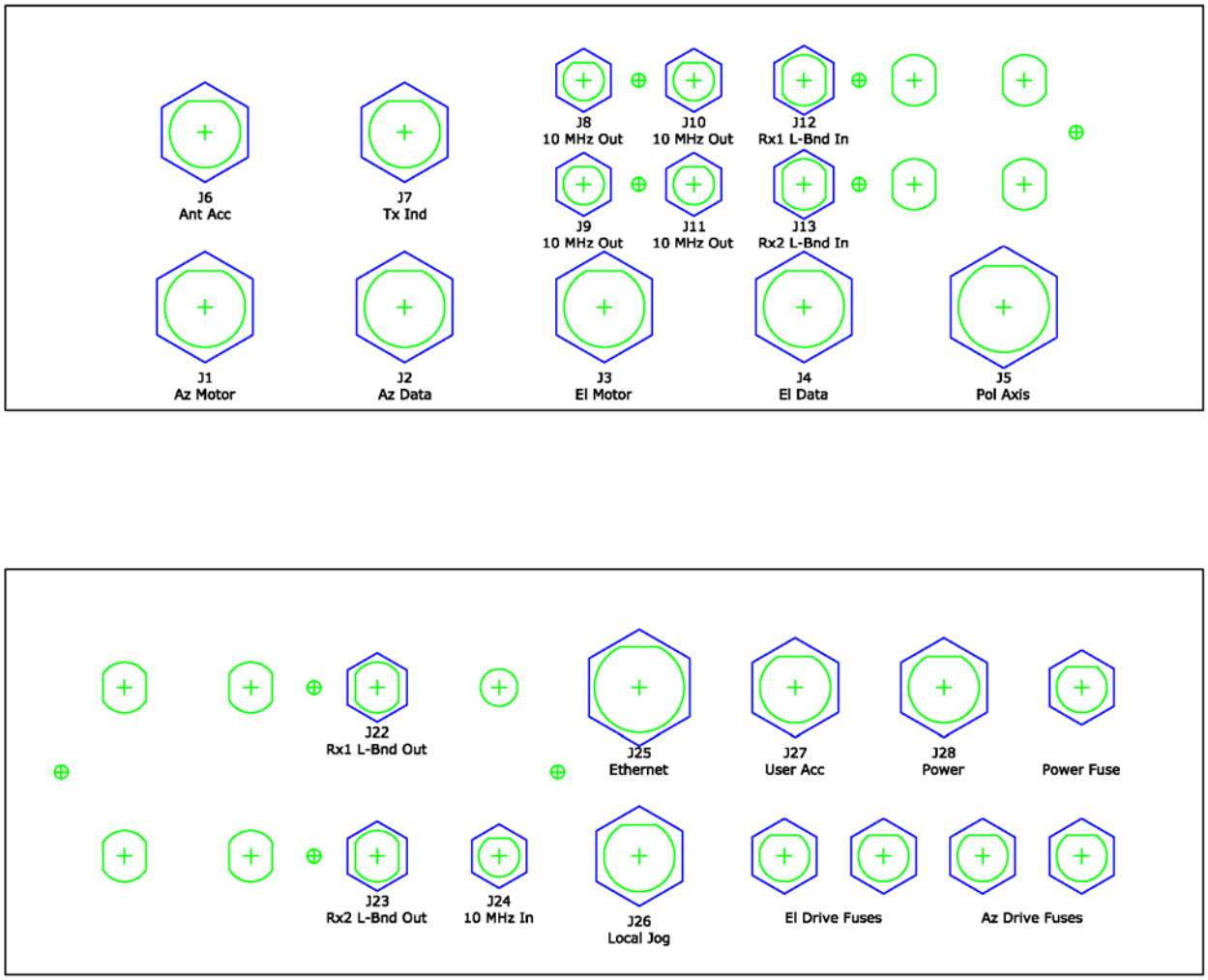

Figure 4

2.3 CONNECTORS

Table 1 provides a list of the external connectors on the enclosure end panels.

Ref Des	Part Number	Description
J1	Amphenol MS-3124E14-12S	Az Motor
J2	Amphenol MS-3124E14-19P	Az Data Box
J3	Amphenol MS-3124E14-12S	El Motor
J4	Amphenol MS-3124E14-19P	El Data Box
J5	Amphenol MS3124E16-26P	Pol Axis
J6	Amphenol MS3124E12-10P	Ant Acc
J7	Amphenol MS3124E12-10S	Tx Indicators
J8	Amphenol 31-318-RFX	10MHz Out (BNC)
J9	Amphenol 31-318-RFX	10MHz Out (BNC)
J10	Amphenol 31-318-RFX	10MHz Out (BNC)
J11	Amphenol 31-318-RFX	10MHz Out (BNC)
J12	Amphenol 172129	Rx1 L-Band In (N-Type)
J13	Amphenol 172129	Rx2 L-Band In (N-Type)
J22	Amphenol 172129	Rx1 L-Band Out (N-Type)
J23	Amphenol 172129	Rx2 L-Band Out (N-Type)
J24	Amphenol 31-318-RFX	10MHz In (BNC)
J25	Tyco 2008615-1	IP * Must use environmentally sealed mating connector *
J26	Amphenol MS3124E1210S	Local Jog
J27	Amphenol MS3124E1210P	User Acc
J28	Amphenol MS3124E12-3P	VAC Power

Table 1

3.0 ELECTRICAL

3.1.0 System Interface

Please refer to the main RC4000 User Manual to become familiar with specific capabilities and functionality of the RC4000 PCB board stack.

Figures 5 - 8 in Section 3.1.1 are provided to assist in interfacing to the RC4000. These diagrams list common equipment and how it connects to each connector on the enclosure.

Section 3.1.2 further describes the enclosure connectors and their respective pin-outs in a tabular form.

3.1.1 System Interface (Graphical)

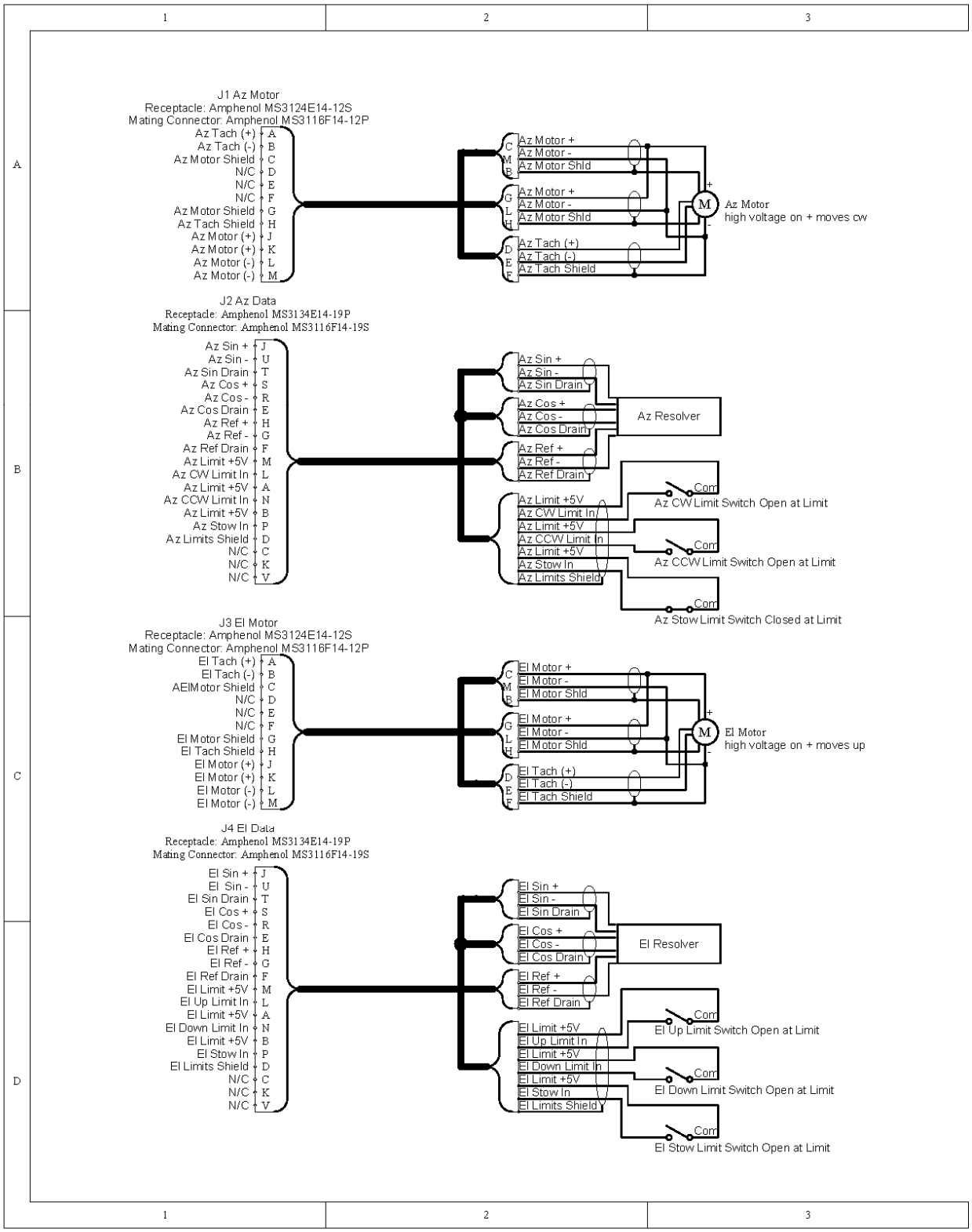

Figure 5

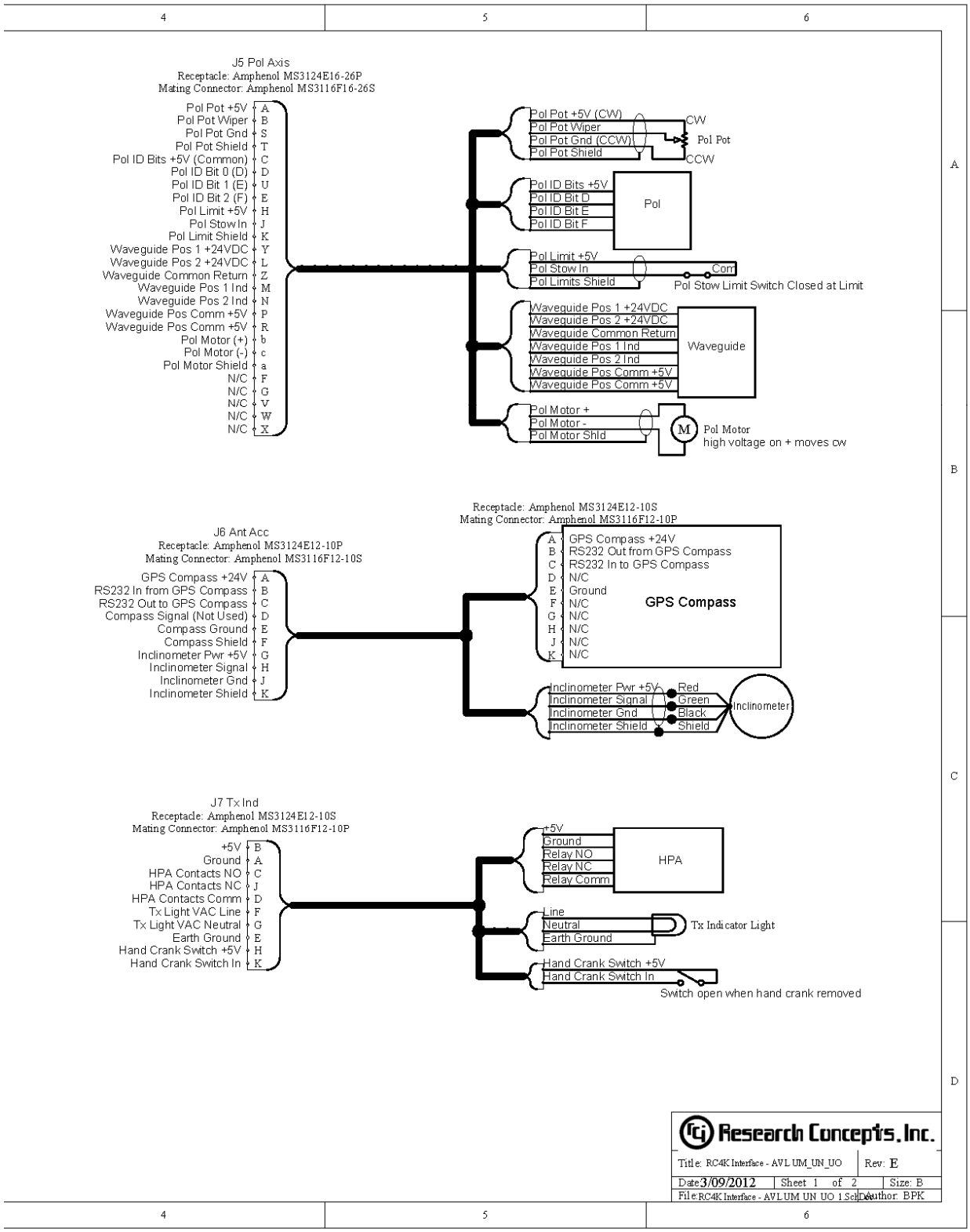
J5 Pol Axis
Receptacle: Amphenol MS3124E16-26P
Mating Connector: Amphenol MS3116F16-26S
Pol Pot +5V A
Pol Pot Wiper B
Pol Pot Gnd S
Pol Pot Shield T
Pol ID Bits +5V (Common) C
Pol ID Bit 0 (D) D
Pol ID Bit 1 (E) U
Pol ID Bit 2 (F) E
Pol Limit +5V H
Pol Stow In J
Pol Limit Shield K
Waveguide Pos 1 +24VDC Y
Waveguide Pos 2 +24VDC L
Waveguide Common Return Z
Waveguide Pos 1 Ind M
Waveguide Pos 2 Ind N
Waveguide Pos Comm +5V P
Waveguide Pos Comm +5V R
Pol Motor (+) b
Pol Motor (-) c
Pol Motor Shield a
N/C F
N/C G
N/C V
N/C W
N/C X
Pol Pot +5V (CW)
Pol Pot Wiper
Pol Pot Gnd (CCW)
Pol Pot Shield
CW
Pol Pot
CCW
Pol ID Bits +5V
Pol ID Bit D
Pol ID Bit E
Pol ID Bit F
Pol
Pol Limit +5V
Pol Stow In
Pol Limits Shield
Com
Pol Stow Limit Switch Closed at Limit
Waveguide Pos 1 +24VDC
Waveguide Pos 2 +24VDC
Waveguide Common Return
Waveguide Pos 1 Ind
Waveguide Pos 2 Ind
Waveguide Pos Comm +5V
Waveguide Pos Comm +5V
Waveguide
Pol Motor +
Pol Motor -
Pol Motor Shld
M
Pol Motor
high voltage on + moves cw
J6 Ant Acc
Receptacle: Amphenol MS3124E12-10P
Mating Connector: Amphenol MS3116F12-10S
GPS Compass +24V A
RS232 In from GPS Compass B
RS232 Out to GPS Compass C
Compass Signal (Not Used) D
Compass Ground E
Compass Shield F
Inclinometer Pwr +5V G
Inclinometer Signal H
Inclinometer Gnd J
Inclinometer Shield K
Receptacle: Amphenol MS3124E12-10S
Mating Connector: Amphenol MS3116F12-10P
A GPS Compass +24V
B RS232 Out from GPS Compass
C RS232 In to GPS Compass
D N/C
E Ground
F N/C
G N/C
H N/C
J N/C
K N/C
GPS Compass
Inclinometer Pwr +5V
Inclinometer Signal
Inclinometer Gnd
Inclinometer Shield
Red
Green
Black
Shield
Inclinometer
J7 Tx Ind
Receptacle: Amphenol MS3124E12-10S
Mating Connector: Amphenol MS3116F12-10P
+5V B
Ground A
HPA Contacts NO C
HPA Contacts NC J
HPA Contacts Comm D
Tx Light VAC Line F
Tx Light VAC Neutral G
Earth Ground E
Hand Crank Switch +5V H
Hand Crank Switch In K
+5V
Ground
Relay NO
Relay NC
Relay Comm
HPA
Line
Neutral
Earth Ground
Tx Indicator Light
Hand Crank Switch +5V
Hand Crank Switch In
Switch open when hand crank removed
Research Concepts, Inc.
Title: RC4K Interface - AVL UM_UN_UO
Rev: E
Date 3/09/2012
Sheet 1 of 2
Size: B
File: RC4K Interface - AVL UM UN UO 1.Sch
Author: BPK

Figure 6

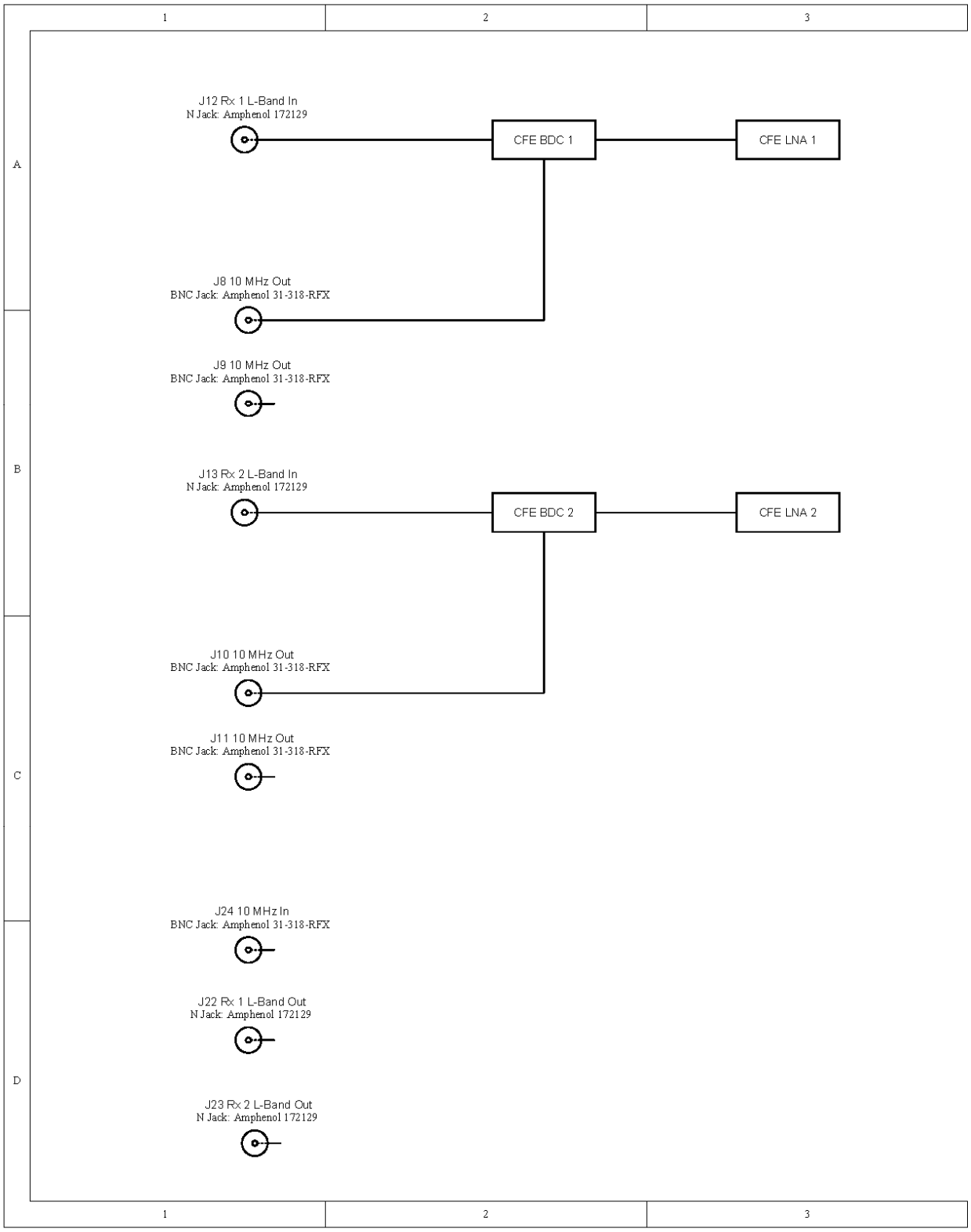
J12 Rx 1 L-Band In
N Jack: Amphenol 172129
CFE BDC 1
CFE LNA 1
J8 10 MHz Out
BNC Jack: Amphenol 31-318-RFX
J9 10 MHz Out
BNC Jack: Amphenol 31-318-RFX
J13 Rx 2 L-Band In
N Jack: Amphenol 172129
CFE BDC 2
CFE LNA 2
J10 10 MHz Out
BNC Jack: Amphenol 31-318-RFX
J11 10 MHz Out
BNC Jack: Amphenol 31-318-RFX
J24 10 MHz In
BNC Jack: Amphenol 31-318-RFX
J22 Rx 1 L-Band Out
N Jack: Amphenol 172129
J23 Rx 2 L-Band Out
N Jack: Amphenol 172129

Figure 7

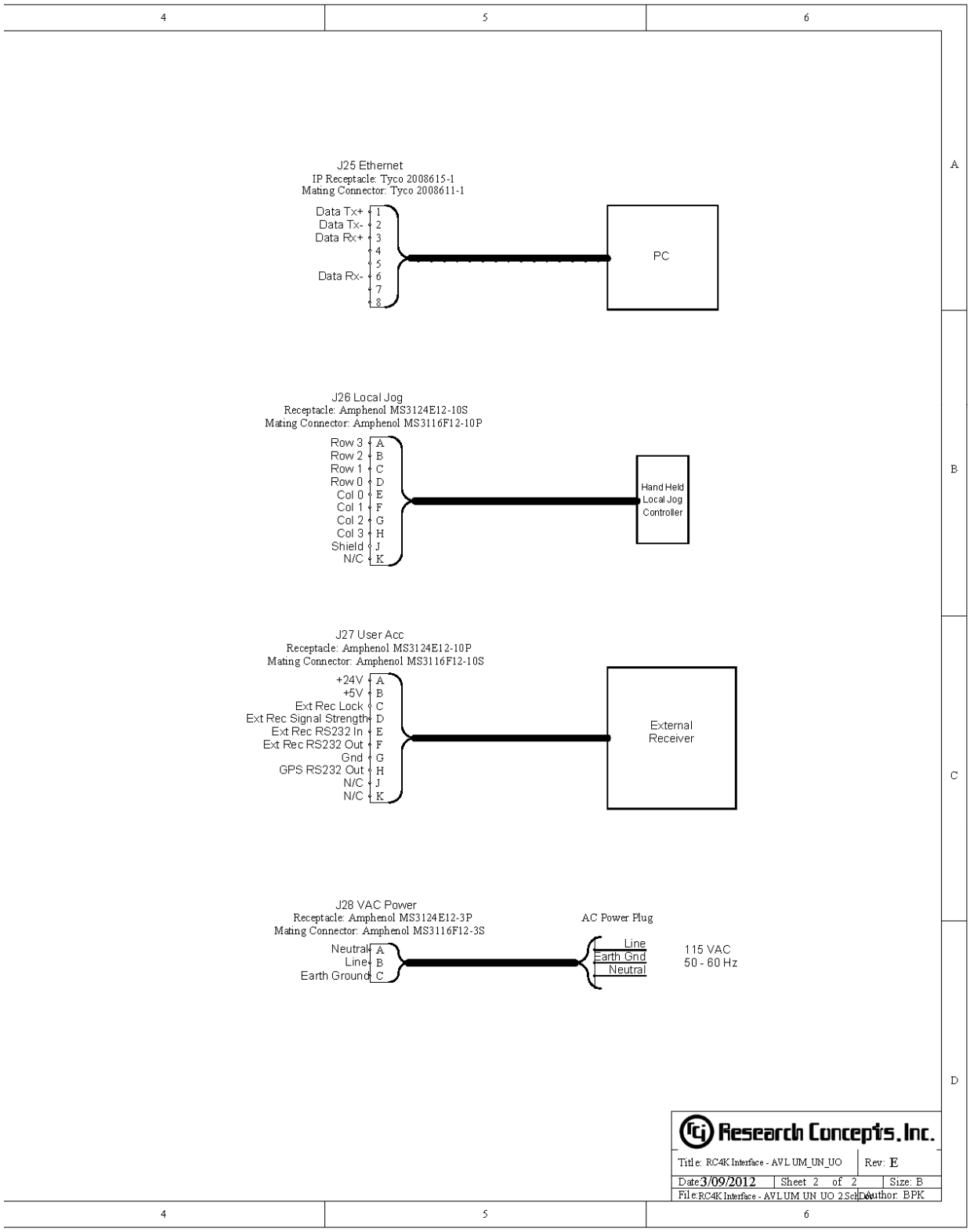
J25 Ethernet
IP Receptacle: Tyco 2008615-1
Mating Connector: Tyco 2008611-1
Data Tx+ 1
Data Tx- 2
Data Rx+ 3
4
5
Data Rx- 6
7
8
PC
J26 Local Jog
Receptacle: Amphenol MS3124E12-10S
Mating Connector: Amphenol MS3116F12-10P
Row 3 A
Row 2 B
Row 1 C
Row 0 D
Col 0 E
Col 1 F
Col 2 G
Col 3 H
Shield J
N/C K
Hand Held Local Jog Controller
J27 User Acc
Receptacle: Amphenol MS3124E12-10P
Mating Connector: Amphenol MS3116F12-10S
+24V A
+5V B
Ext Rec Lock C
Ext Rec Signal Strength D
Ext Rec RS232 In E
Ext Rec RS232 Out F
Gnd G
GPS RS232 Out H
N/C J
N/C K
External Receiver
J28 VAC Power
Receptacle: Amphenol MS3124E12-3P
Mating Connector: Amphenol MS3116F12-3S
Neutral A
Line B
Earth Ground C
AC Power Plug
Line
Earth Gnd
Neutral
115 VAC
50 - 60 Hz
Research Concepts, Inc.
Title: RC4K Interface - AVL UM_UN_UO
Rev: E
Date 3/09/2012
Sheet 2 of 2
Size: B
File: RC4K Interface - AVL UM UN UO 2.Sch
Author: BPK

Figure 8

3.1.2 System Interface (Tabular)

Reference J1
Description Az Motor
RCI P/N CN-MS3124E1412S
Manufacturer Amphenol Industrial
Manufacturer P/N MS3124E14-12S
Mating Connector MS3116F14-12P
RCI p/n CN-MS31161412P
Mating Conn. Cap MS3180-14-CA
RCI p/n CN-MS3180-14CA

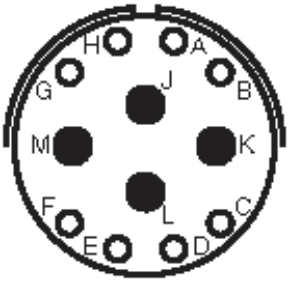

Pin	Description	Notes
A	Az Tach (+)	
B	Az Tach (-)	
C	Az Motor Shield	
D	N/C	
E	N/C	
F	N/C	
G	Az Motor Shield	
H	Az Tach Shield	
J	Az Motor (+)	
K	Az Motor (+)	
L	Az Motor (-)	
M	Az Motor (-)	

Reference J2
Description Az Data Box
RCI P/N CN-MS3124E1419P
Manufacturer Amphenol Industrial
Manufacturer P/N MS3124E14-19P
Mating Connector MS3116F14-19S
RCI p/n CN-MS31161419S
Mating Conn. Cap MS3180-14-CA
RCI p/n CN-MS3180-14CA

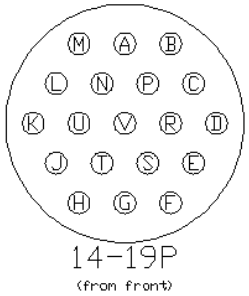

Pin	Description	Notes
J	Az Sin+	
U	Az Sin -	
T	Az Sin Drain	
S	Az Cos+	
R	Az Cos-	
E	Az Cos Drain	
H	Az Ref+	
G	Az Ref-	
F	Az Ref Drain	
M	Az Limit +5V	
L	Az CW Limit In	
A	Az Limit +5V	
N	Az CCW Limit In	
B	Az Limit +5V	
P	Az Stow In	
D	Az Limits Shield	
C	N/C	
K	N/C	
V	N/C	

Reference J3
Description El Motor
RCI P/N CN-MS3124E1412S
Manufacturer Amphenol Industrial
Manufacturer P/N MS3124E14-12S
Mating Connector MS3116F14-12P
RCI p/n CN-MS31161412P
Mating Conn. Cap MS3180-14-CA
RCI p/n CN-MS3180-14CA

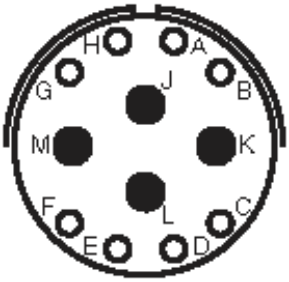

Pin	Description	Notes
A	El Tach (+)	
B	El Tach (-)	
C	El Motor Shield	
D	N/C	
E	N/C	
F	N/C	
G	El Motor Shield	
H	El Tach Shield	
J	El Motor (+)	
K	El Motor (+)	
L	El Motor (-)	
M	El Motor (-)	

Reference J4
Description El Data Box
RCI P/N CN-MS3124E1419P
Manufacturer Amphenol Industrial
Manufacturer P/N MS3124E14-19P
Mating Connector MS3116F14-19S
RCI p/n CN-MS31161419S
Mating Conn. Cap MS3180-14-CA
RCI p/n CN-MS3180-14CA

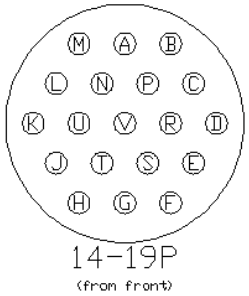

Pin	Description	Notes
J	El Sin+	
U	El Sin -	
T	El Sin Drain	
S	El Cos+	
R	El Cos-	
E	El Cos Drain	
H	El Ref+	
G	El Ref-	
F	El Ref Drain	
M	El Limit +5V	
L	El Up Limit In	
A	El Limit +5V	
N	El Down Limit In	
B	El Limit +5V	
P	El Stow In	
D	El Limits Shield	
C	N/C	
K	N/C	
V	N/C	

Reference J5
Description Pol Axis
RCI P/N CN-MS3124E16-26P
Manufacturer Amphenol Industrial
Manufacturer P/N MS3124E16-26P
Mating Connector MS3116F16-26S
RCI p/n CN-MS311616-26S
Mating Conn. Cap MS3180-16CA
RCI p/n CN-MS3180-16CA

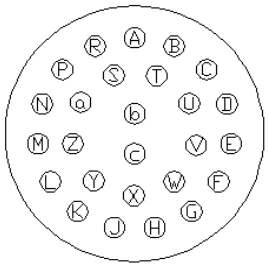

16-26P
(from front)

Pin	Description	Notes
A	Pol Pot +5V	
B	Pol Pot Wiper	
S	Pol Pot Gnd	
T	Pol Pot Shield	
C	Pol ID Bits +5V (Common)	
D	Pol ID Bit 0 (D)	
U	Pol ID Bit 1 (E)	
E	Pol ID Bit 2 (F)	
H	Pol Limit +5V	
J	Pol Stow In	
K	Pol Limit Shield	
Y	Waveguide Pos 1 +24VDC	
L	Waveguide Pos 2 +24VDC	
Z	Waveguide Common Return	
M	Waveguide Pos 1 Ind	
N	Waveguide Pos 2 Ind	
P	Waveguide Pos Comm +5V	
R	Waveguide Pos Comm +5V	
b	Pol Motor (+)	
c	Pol Motor (-)	
a	Pol Motor Shield	
F	N/C	
G	N/C	
V	N/C	
W	N/C	
X	N/C	

Reference J6
Description Ant Acc
RCI P/N CN-MS3124E1210P
Manufacturer Amphenol Industrial
Manufacturer P/N MS3124E12-10P
Mating Connector MS3116F12-10S
RCI p/n CN-MS31161210S
Mating Conn. Cap MS3180-12-CA
RCI p/n CN-MS3180-12CA

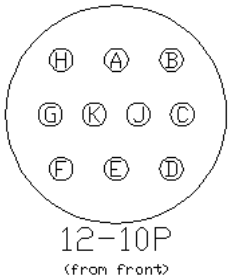

Pin	Description	Notes
A	GPS Compass +24V	
B	RS232 In from GPS Compass	
C	RS232 Out to GPS Compass	
D	Compass Signal	Not used with GPS Compass
E	Compass Ground	
F	Compass Shield	
G	Inclinometer Pwr +5V	
H	Inclinometer Signal	
J	Inclinometer Gnd	
K	Inclinometer Shield	

Reference J7
Description Tx Indicators
RCI P/N CN-MS3124E1210S
Manufacturer Amphenol Industrial
Manufacturer P/N MS3124E12-10S
Mating Connector MS3116F12-10P
RCI p/n CN-MS31161210P
Mating Conn. Cap MS3180-12-CA
RCI p/n CN-MS3180-12CA

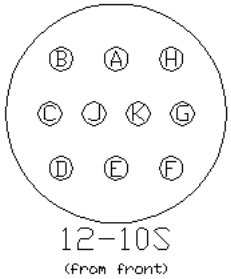

Pin	Description	Notes
B	+5V	
A	Ground	
C	HPA Contacts NO	
J	HPA Contacts NC	
D	HPA Contacts Common	
F	Tx Light VAC Line	Logic opposite that of HPA disable
G	Tx Light VAC Neutral	
E	Earth Ground	
H	Hand Crank Switch +5V	
K	Hand Crank Switch In	

Reference	J8
Description	10 MHz 1 Out (1), 50 Ohm BNC
RCI P/N	CN-BLKHD-JK174
Manufacturer	Amphenol RF
Manufacturer P/N	31-318-RFX

Reference	J9
Description	10 MHz 1 Out (2), 50 Ohm BNC
RCI P/N	CN-BLKHD-JK174
Manufacturer	Amphenol RF
Manufacturer P/N	31-318-RFX

Reference	J10
Description	10 MHz 2 Out (1), 50 Ohm BNC
RCI P/N	CN-BLKHD-JK174
Manufacturer	Amphenol RF
Manufacturer P/N	31-318-RFX

Reference	J11
Description	10 MHz 2 Out (2), 50 Ohm BNC
RCI P/N	CN-BLKHD-JK174
Manufacturer	Amphenol RF
Manufacturer P/N	31-318-RFX

Reference	J12
Description	Rx L-Band 1 In, 50 Ohm N-Type
RCI P/N	CN-172129
Manufacturer	Amphenol RF
Manufacturer P/N	172129

Reference	J13
Description	Rx L-Band 2 In, 50 Ohm N-Type
RCI P/N	CN-172129
Manufacturer	Amphenol RF
Manufacturer P/N	172129

Reference	J22
Description	Rx L-Band 1 Out, 50 Ohm N-Type
RCI P/N	CN-172129
Manufacturer	Amphenol RF
Manufacturer P/N	172129

Reference J23
Description Rx L-Band 2 Out, 50 Ohm N-Type
RCI P/N CN-172129
Manufacturer Amphenol RF
Manufacturer P/N 172129

Reference J24
Description 10 MHz In, 50 Ohm BNC
RCI P/N CN-BLKHD-JK174
Manufacturer Amphenol RF
Manufacturer P/N 31-318-RFX

Reference J25
Description Ethernet Interface
RCI P/N CN-2008615-1
Manufacturer Tyco
Manufacturer P/N 2008615-1
Mating Connector Tyco 2008611-1
RCI p/n CN-2008611-1

Reference J26
Description Local Jog
RCI P/N CN-MS3124E1210S
Manufacturer Amphenol Industrial
Manufacturer P/N MS3124E12-10S
Mating Connector MS3116F12-10P
RCI p/n CN-MS31161210P
Mating Conn. Cap MS3180-12-CA
RCI p/n CN-MS3180-12CA

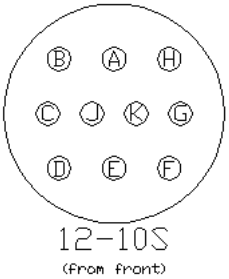

Pin	Description	Notes
A	Row 3	
B	Row 2	
C	Row 1	
D	Row 0	
E	Col 0	
F	Col 1	
G	Col 2	
H	Col 3	
J	Shield	
K	N/C	

Reference J27
Description User Acc
RCI P/N CN-MS3124E1210P
Manufacturer Amphenol Industrial
Manufacturer P/N MS3124E12-10P
Mating Connector MS3116F12-10S
CN-MS31161210S
Mating Conn. Cap: MS3180-12-CA
RCI p/n CN-MS3180-12CA

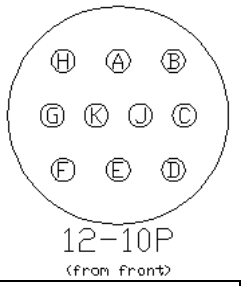

Pin	Description	Notes
A	+24VDC	
B	+5VDC	
C	Ext Rec Lock	
D	Ext Rec Signal Strength	
E	Ext Rec RS232 In	
F	Ext Rec RS232 Out	
G	Ground	
H	GPS RS232 Out	
J	N/C	
K	N/C	

Reference J28
Description VAC Power Input
RCI P/N CN-MS3124E12-3P
Manufacturer Amphenol
Manufacturer P/N MS3124E12-3P
Mating Connector MS3116F12-3S
Mating Conn. Cap MS3180-12-CA
RCI p/n CN-MS3180-12CA

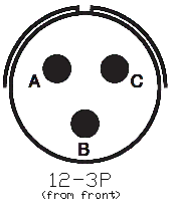

Pin	Description	Notes
A	Neutral	
B	Line	
C	Earth Ground	

3.2 Internal Wiring

Figures 9 - 13 show the interconnections of the internal wiring of the enclosure.
For a more detailed explanation of functions of individual pins, please refer to the main RC4000 User Manual.

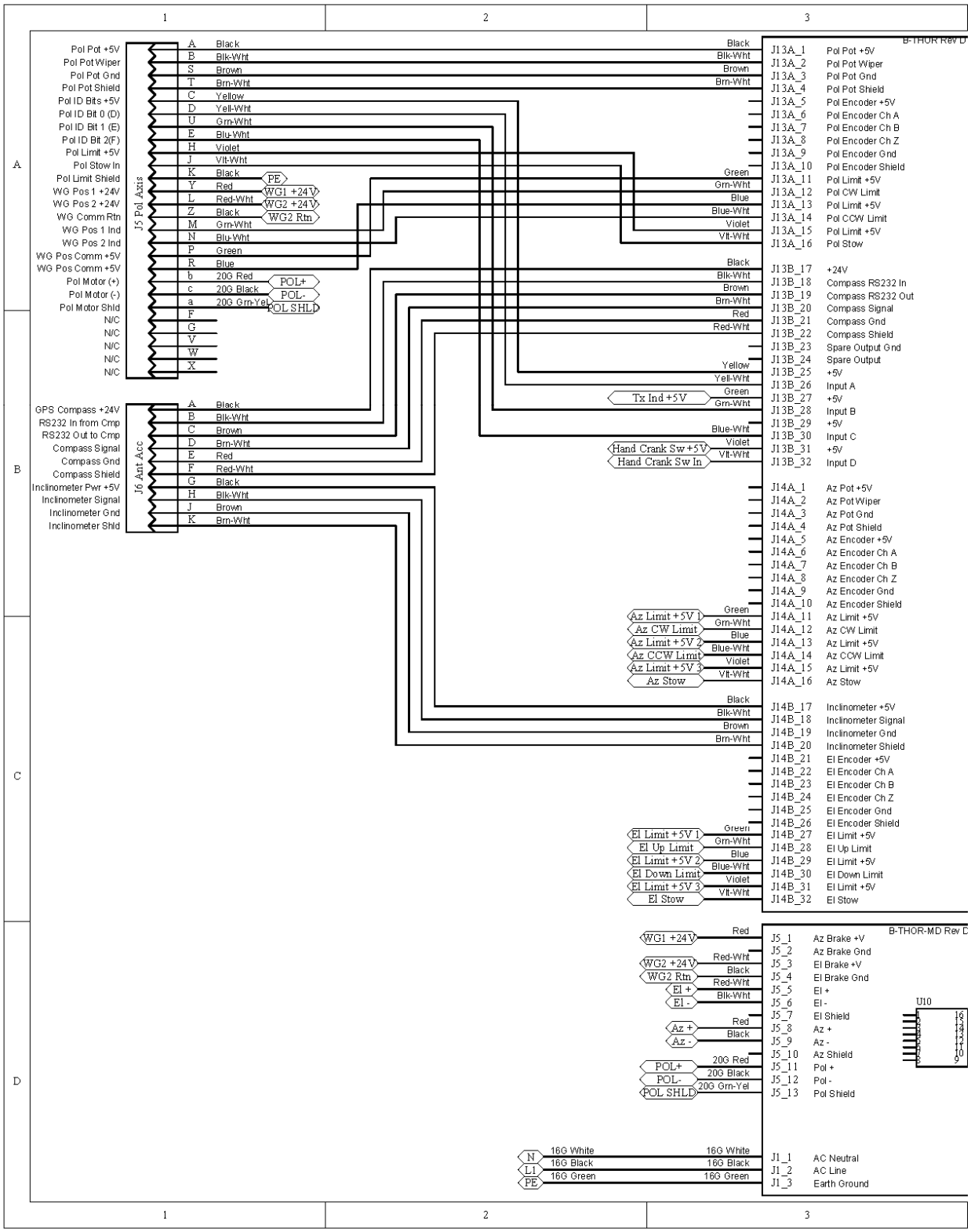
J5 Pol Axis
Pol Pot +5V
Pol Pot Wiper
Pol Pot Gnd
Pol Pot Shield
Pol ID Bits +5V
Pol ID Bit 0 (D)
Pol ID Bit 1 (E)
Pol ID Bit 2(F)
Pol Limit +5V
Pol Stow In
Pol Limit Shield
WG Pos 1 +24V
WG Pos 2 +24V
WG Comm Rtn
WG Pos 1 Ind
WG Pos 2 Ind
WG Pos Comm +5V
WG Pos Comm +5V
Pol Motor (+)
Pol Motor (-)
Pol Motor Shld
N/C
J6 Ant Acc
GPS Compass +24V
RS232 In from Cmp
RS232 Out to Cmp
Compass Signal
Compass Gnd
Compass Shield
Inclinometer Pwr +5V
Inclinometer Signal
Inclinometer Gnd
Inclinometer Shld
B-THOR Rev D
J13A_1 Pol Pot +5V
J13A_2 Pol Pot Wiper
J13A_3 Pol Pot Gnd
J13A_4 Pol Pot Shield
J13A_5 Pol Encoder +5V
J13A_6 Pol Encoder Ch A
J13A_7 Pol Encoder Ch B
J13A_8 Pol Encoder Ch Z
J13A_9 Pol Encoder Gnd
J13A_10 Pol Encoder Shield
J13A_11 Pol Limit +5V
J13A_12 Pol CW Limit
J13A_13 Pol Limit +5V
J13A_14 Pol CCW Limit
J13A_15 Pol Limit +5V
J13A_16 Pol Stow
J13B_17 +24V
J13B_18 Compass RS232 In
J13B_19 Compass RS232 Out
J13B_20 Compass Signal
J13B_21 Compass Gnd
J13B_22 Compass Shield
J13B_23 Spare Output Gnd
J13B_24 Spare Output
J13B_25 +5V
J13B_26 Input A
J13B_27 +5V
J13B_28 Input B
J13B_29 +5V
J13B_30 Input C
J13B_31 +5V
J13B_32 Input D
J14A_1 Az Pot +5V
J14A_2 Az Pot Wiper
J14A_3 Az Pot Gnd
J14A_4 Az Pot Shield
J14A_5 Az Encoder +5V
J14A_6 Az Encoder Ch A
J14A_7 Az Encoder Ch B
J14A_8 Az Encoder Ch Z
J14A_9 Az Encoder Gnd
J14A_10 Az Encoder Shield
J14A_11 Az Limit +5V
J14A_12 Az CW Limit
J14A_13 Az Limit +5V
J14A_14 Az CCW Limit
J14A_15 Az Limit +5V
J14A_16 Az Stow
J14B_17 Inclinometer +5V
J14B_18 Inclinometer Signal
J14B_19 Inclinometer Gnd
J14B_20 Inclinometer Shield
J14B_21 El Encoder +5V
J14B_22 El Encoder Ch A
J14B_23 El Encoder Ch B
J14B_24 El Encoder Ch Z
J14B_25 El Encoder Gnd
J14B_26 El Encoder Shield
J14B_27 El Limit +5V
J14B_28 El Up Limit
J14B_29 El Limit +5V
J14B_30 El Down Limit
J14B_31 El Limit +5V
J14B_32 El Stow
B-THOR-MD Rev D
J5_1 Az Brake +V
J5_2 Az Brake Gnd
J5_3 El Brake +V
J5_4 El Brake Gnd
J5_5 El +
J5_6 El -
J5_7 El Shield
J5_8 Az +
J5_9 Az -
J5_10 Az Shield
J5_11 Pol +
J5_12 Pol -
J5_13 Pol Shield
U10
J1_1 AC Neutral
J1_2 AC Line
J1_3 Earth Ground
PE
WG1 +24V
WG2 +24V
WG2 Rtn
POL+
POL-
POL SHLD
Tx Ind +5V
Hand Crank Sw +5V
Hand Crank Sw In
Az Limit +5V 1
Az CW Limit
Az Limit +5V 2
Az CCW Limit
Az Limit +5V 3
Az Stow
El Limit +5V 1
El Up Limit
El Limit +5V 2
El Down Limit
El Limit +5V 3
El Stow
El +
El -
Az +
Az -
N
L1
16G White
16G Black
16G Green

Figure 9

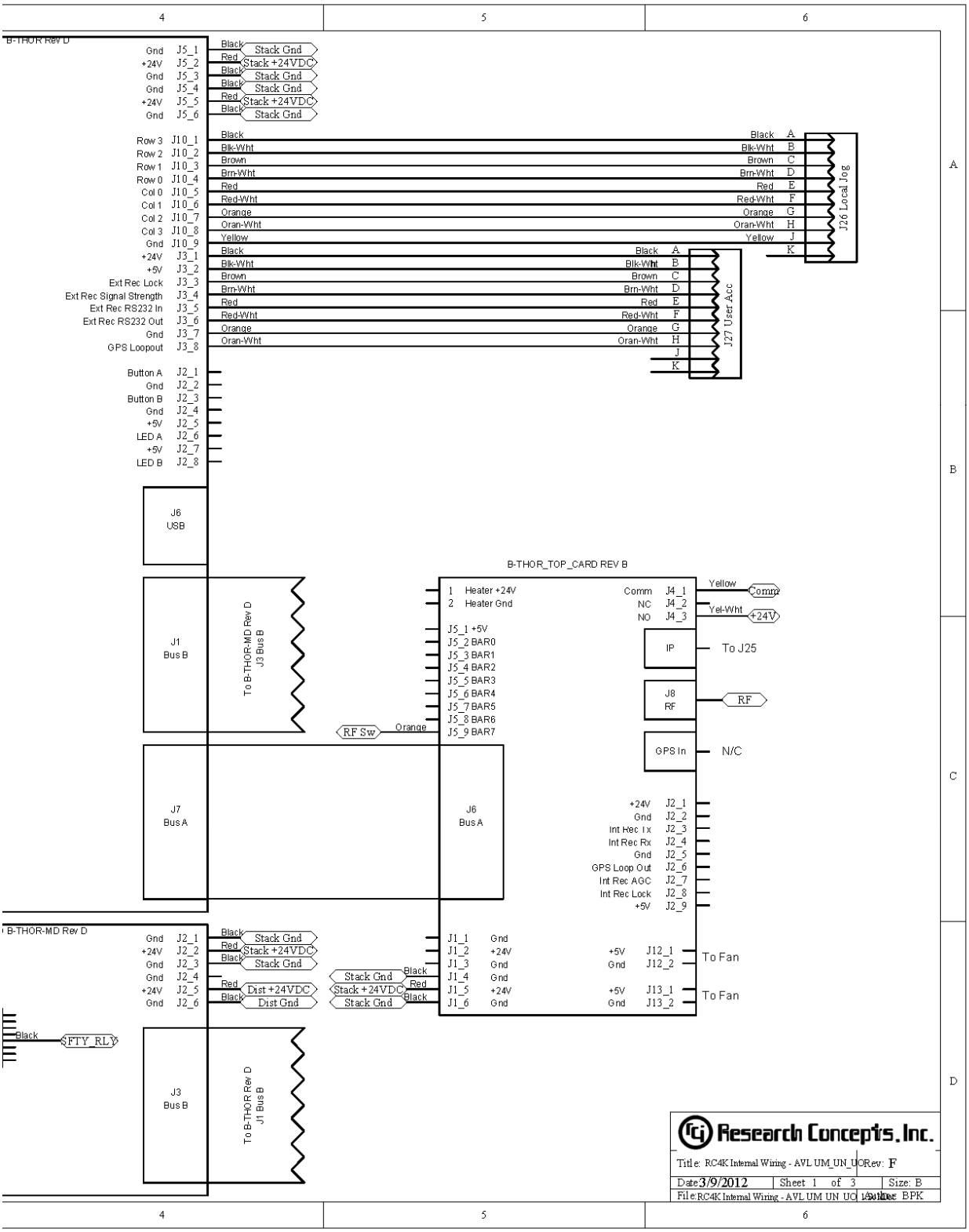
B-THOR Rev D
Gnd J5_1
+24V J5_2
Gnd J5_3
Gnd J5_4
+24V J5_5
Gnd J5_6
Stack Gnd
Stack +24VDC
Row 3 J10_1
Row 2 J10_2
Row 1 J10_3
Row 0 J10_4
Col 0 J10_5
Col 1 J10_6
Col 2 J10_7
Col 3 J10_8
Gnd J10_9
+24V J3_1
+5V J3_2
Ext Rec Lock J3_3
Ext Rec Signal Strength J3_4
Ext Rec RS232 In J3_5
Ext Rec RS232 Out J3_6
Gnd J3_7
GPS Loopout J3_8
Button A J2_1
Gnd J2_2
Button B J2_3
Gnd J2_4
+5V J2_5
LED A J2_6
+5V J2_7
LED B J2_8
J26 Local Jog
J27 User Acc
J6 USB
J1 Bus B
To B-THOR-MD Rev D J3 Bus B
B-THOR_TOP_CARD REV B
1 Heater +24V
2 Heater Gnd
J5_1 +5V
J5_2 BAR0
J5_3 BAR1
J5_4 BAR2
J5_5 BAR3
J5_6 BAR4
J5_7 BAR5
J5_8 BAR6
J5_9 BAR7
RF Sw
Orange
Comm J4_1
NC J4_2
NO J4_3
Yellow
Yel-Wht
Comm
+24V
IP
To J25
J8 RF
RF
GPS In
N/C
J7 Bus A
J6 Bus A
+24V J2_1
Gnd J2_2
Int Rec Tx J2_3
Int Rec Rx J2_4
Gnd J2_5
GPS Loop Out J2_6
Int Rec AGC J2_7
Int Rec Lock J2_8
+5V J2_9
B-THOR-MD Rev D
Gnd J2_1
+24V J2_2
Gnd J2_3
Gnd J2_4
+24V J2_5
Gnd J2_6
Dist +24VDC
Dist Gnd
J1_1 Gnd
J1_2 +24V
J1_3 Gnd
J1_4 Gnd
J1_5 +24V
J1_6 Gnd
+5V J12_1
Gnd J12_2
To Fan
+5V J13_1
Gnd J13_2
To Fan
SFTY_RLY
J3 Bus B
To B-THOR Rev D J1 Bus B
Research Concepts, Inc.
Title: RC4K Internal Wiring - AVL UM_UN_UO Rev: F
Date 3/9/2012
Sheet 1 of 3
Size: B
File: RC4K Internal Wiring - AVL UM UN UO
Author: BPK

Figure 10

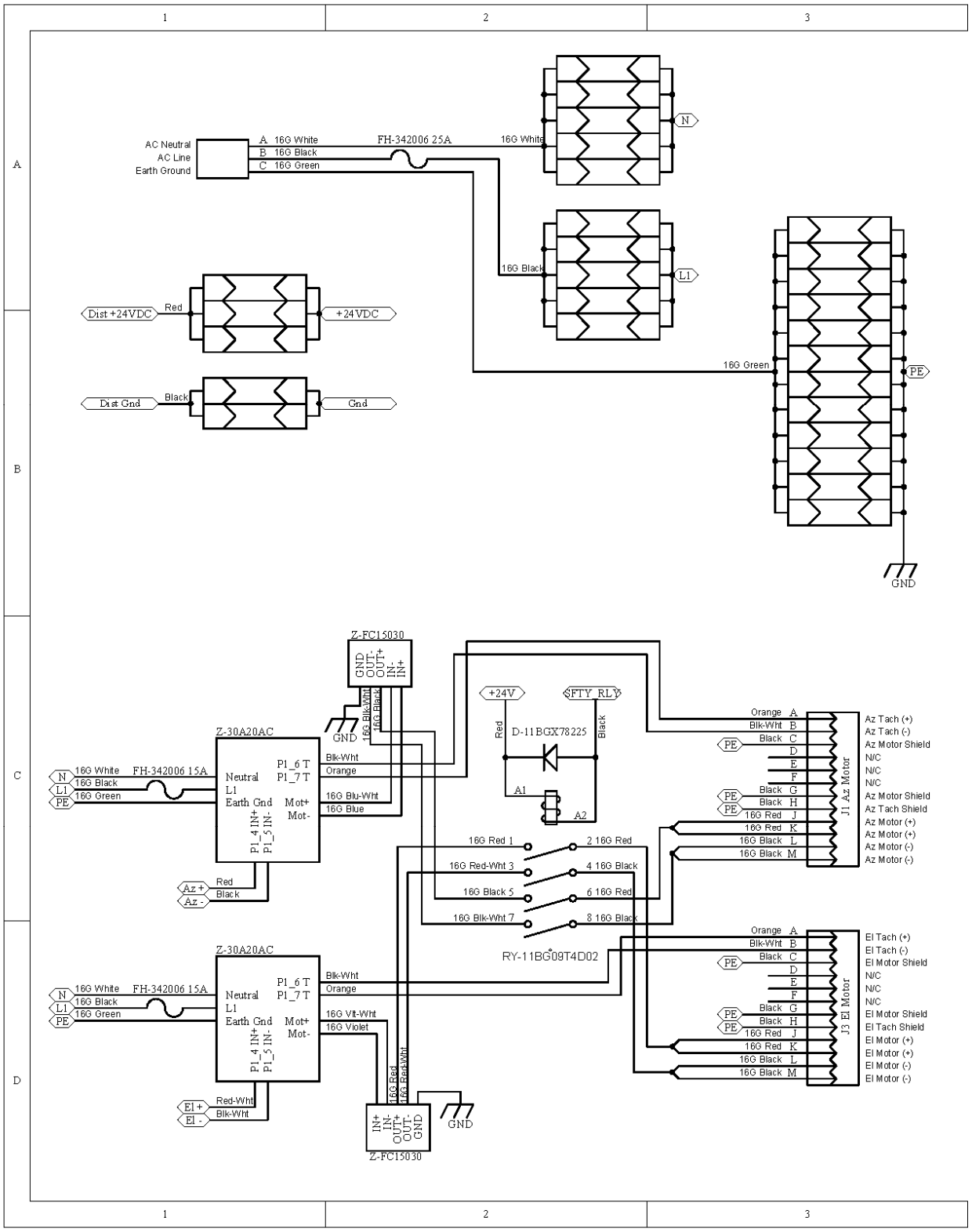
AC Neutral
AC Line
Earth Ground
A 16G White
B 16G Black
C 16G Green
FH-342006 25A
16G White
16G Black
16G Green
N
L1
PE
GND
Dist +24VDC
Red
+24VDC
Dist Gnd
Black
Gnd
Z-FC15030
GND
OUT-
OUT+
IN-
IN+
16G Blk-Wht
16G Black
Z-30A20AC
Neutral
L1
Earth Gnd
P1_6 T
P1_7 T
Mot+
Mot-
P1_4 IN+
P1_5 IN-
Blk-Wht
Orange
16G Blu-Wht
16G Blue
16G White
FH-342006 15A
16G Black
16G Green
Az +
Az -
Red
Black
+24V
SFTY RLY
D-11BGX78225
A1
A2
16G Red 1
2 16G Red
16G Red-Wht 3
4 16G Black
16G Black 5
6 16G Red
16G Blk-Wht 7
8 16G Black
RY-11BG09T4D02
Orange A
Blk-Wht B
Black C
D
E
F
Black G
Black H
16G Red J
16G Red K
16G Black L
16G Black M
J1 Az Motor
Az Tach (+)
Az Tach (-)
Az Motor Shield
N/C
N/C
N/C
Az Motor Shield
Az Tach Shield
Az Motor (+)
Az Motor (+)
Az Motor (-)
Az Motor (-)
J3 El Motor
El Tach (+)
El Tach (-)
El Motor Shield
N/C
N/C
N/C
El Motor Shield
El Tach Shield
El Motor (+)
El Motor (+)
El Motor (-)
El Motor (-)
16G Violet
16G Vlt-Wht
El +
El -
Red-Wht
Blk-Wht
16G Red
16G Red-Wht
IN+
IN-
OUT+
OUT-
GND

Figure 11

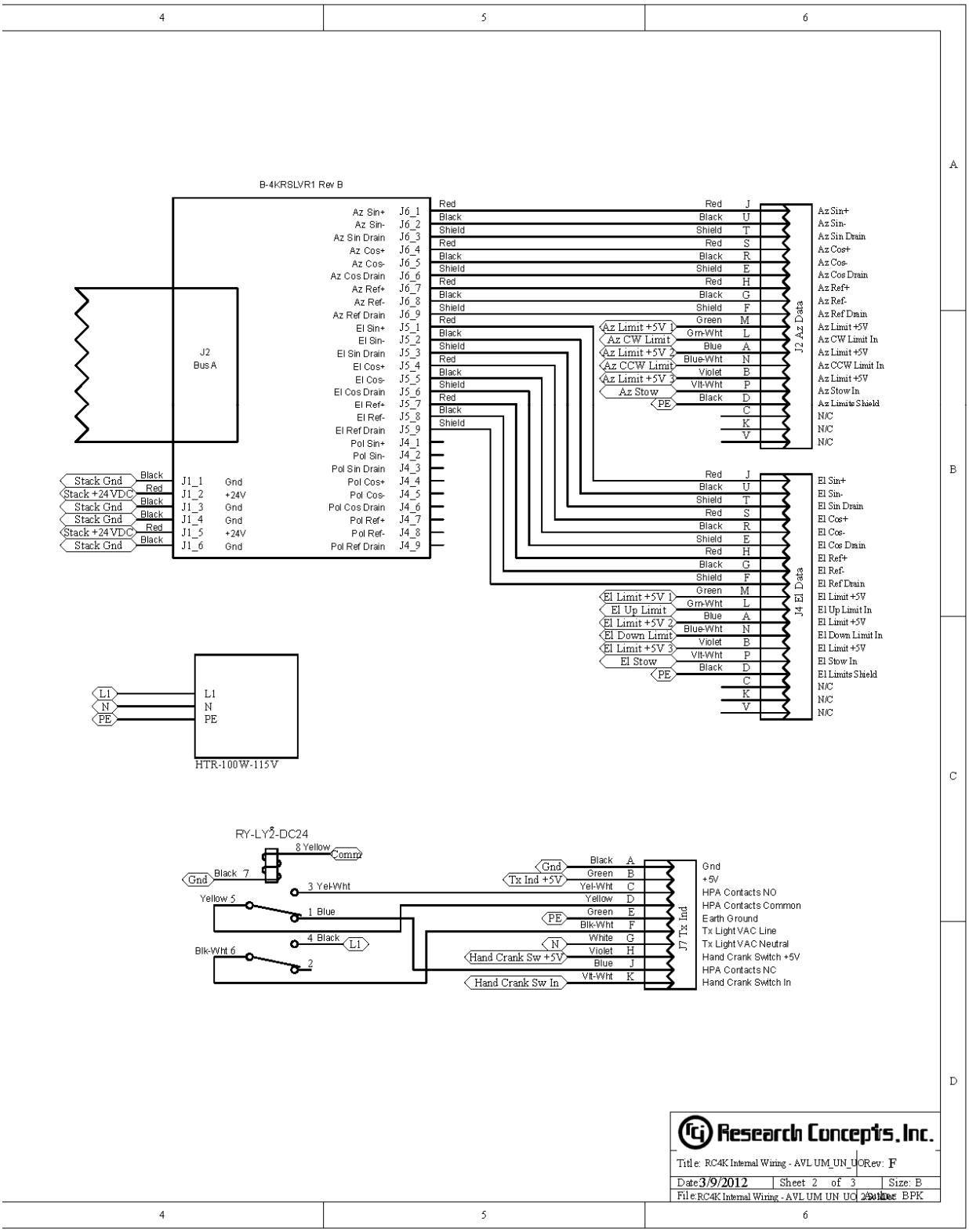
B-4KRSLVR1 Rev B
J2
Bus A
Az Sin+ J6_1
Az Sin- J6_2
Az Sin Drain J6_3
Az Cos+ J6_4
Az Cos- J6_5
Az Cos Drain J6_6
Az Ref+ J6_7
Az Ref- J6_8
Az Ref Drain J6_9
El Sin+ J5_1
El Sin- J5_2
El Sin Drain J5_3
El Cos+ J5_4
El Cos- J5_5
El Cos Drain J5_6
El Ref+ J5_7
El Ref- J5_8
El Ref Drain J5_9
Pol Sin+ J4_1
Pol Sin- J4_2
Pol Sin Drain J4_3
Pol Cos+ J4_4
Pol Cos- J4_5
Pol Cos Drain J4_6
Pol Ref+ J4_7
Pol Ref- J4_8
Pol Ref Drain J4_9
Stack Gnd
Stack +24VDC
J1_1 Gnd
J1_2 +24V
J1_3 Gnd
J1_4 Gnd
J1_5 +24V
J1_6 Gnd
J2 Az Data
Az Limit +5V 1
Az CW Limit
Az Limit +5V 2
Az CCW Limit
Az Limit +5V 3
Az Stow
PE
J4 El Data
El Limit +5V 1
El Up Limit
El Limit +5V 2
El Down Limit
El Limit +5V 3
El Stow
L1
N
PE
HTR-100W-115V
RY-LY2-DC24
8 Yellow
Comm
Gnd
Black 7
3 Yel-Wht
Yellow 5
1 Blue
4 Black
L1
Blk-Wht 6
2
J7 Tx Ind
Tx Ind +5V
Hand Crank Sw +5V
Hand Crank Sw In
Gnd
+5V
HPA Contacts NO
HPA Contacts Common
Earth Ground
Tx Light VAC Line
Tx Light VAC Neutral
Hand Crank Switch +5V
HPA Contacts NC
Hand Crank Switch In
Research Concepts, Inc.
Title: RC4K Internal Wiring - AVL UM_UN_UO Rev: F
Date 3/9/2012 Sheet 2 of 3 Size: B
File: RC4K Internal Wiring - AVL UM UN UO Author: BPK

Figure 12

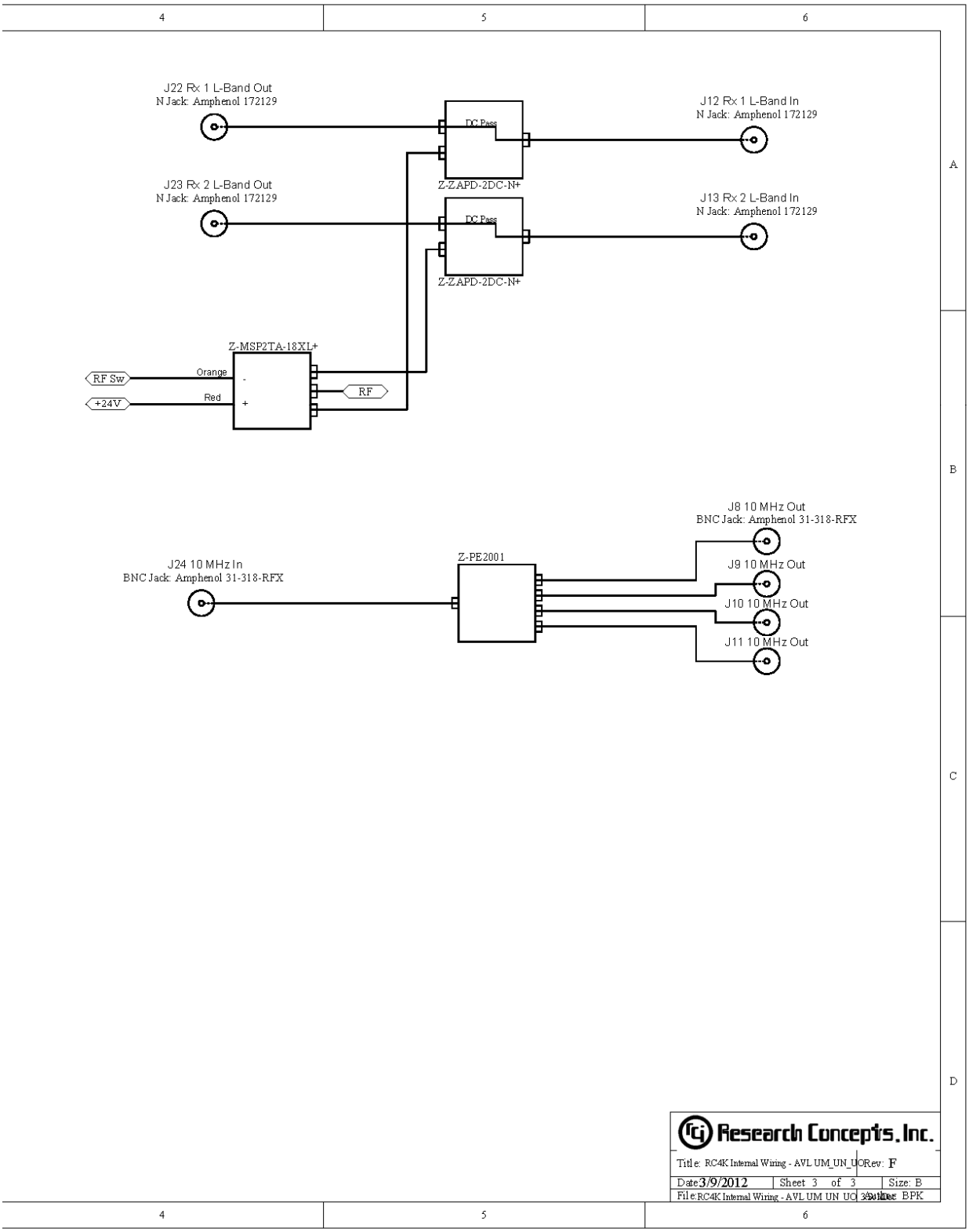
J22 Rx 1 L-Band Out
N Jack: Amphenol 172129
J23 Rx 2 L-Band Out
N Jack: Amphenol 172129
DC Pass
Z-ZAPD-2DC-N+
DC Pass
Z-ZAPD-2DC-N+
J12 Rx 1 L-Band In
N Jack: Amphenol 172129
J13 Rx 2 L-Band In
N Jack: Amphenol 172129
Z-MSP2TA-18XL+
RF Sw
Orange
+24V
Red
RF
J8 10 MHz Out
BNC Jack: Amphenol 31-318-RFX
J24 10 MHz In
BNC Jack: Amphenol 31-318-RFX
Z-PE2001
J9 10 MHz Out
J10 10 MHz Out
J11 10 MHz Out
Research Concepts, Inc.
Title: RC4K Internal Wiring - AVL UM_UN_UO
Rev: F
Date 3/9/2012
Sheet 3 of 3
Size: B
File: RC4K Internal Wiring - AVL UM UN UO
Author: BPK

Figure 13